Förhandsgranskning / Preview Standard withdrawn.

SKOGSINDUSTRIERNAS
TEKNIK AB
Pulp and Paper Industries' Engineering Co
Sweden

Floor gulleys, untrapped type

Introduction

This standard contains recommendations for the installation of floor gulleys of the untrapped type in concrete floors.

1 Designation

Untrapped gulley SSG 5570 - Discharge/Dy - Height H - Material - Trap[1)]

1.1 Example 1 **Untrapped gulley SSG 5570 - BU/110 - H180 - SS Steel 2333**

1.2 Example 2 **Untrapped gulley SSG 5570 - SU/154 - H150 - SS Steel 2343**

1) Type of trap to be given in full if necessary.

2 Requirements

2.1 General

All welding shall be carried out in accordance with Manual for Steel Structures BSK 94 of the Swedish Board of Housing, Building and Planning. The gulleys are to be cast into the floor so that the grating is ca 15 mm below finished floor level.

211 Material

SS Steel 2333 or SS Steel 2343 (Swedish standard).

2.2 Construction

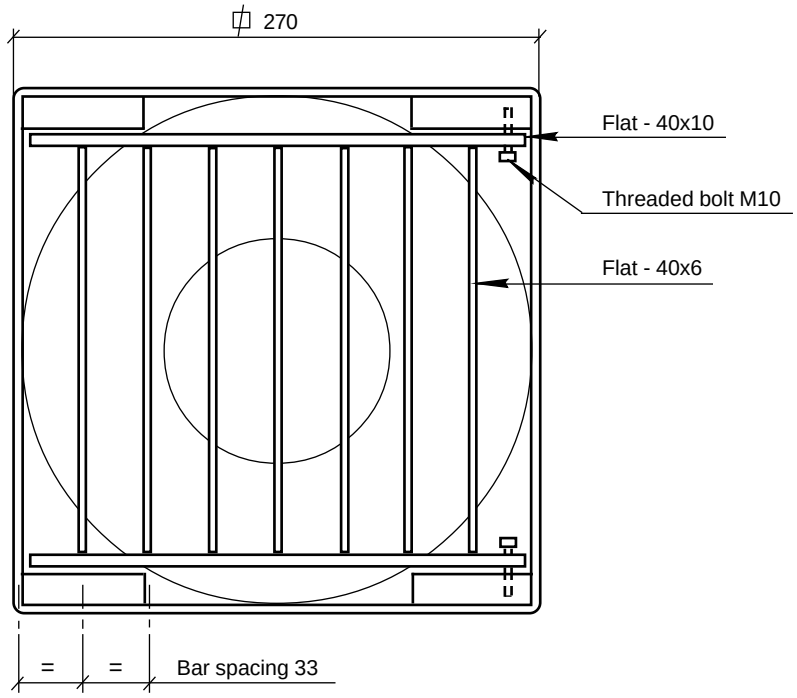

2.21 Detail of grating attachment

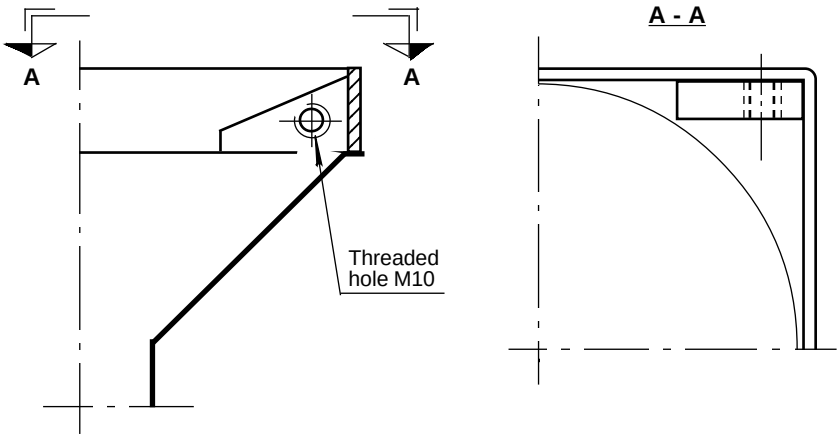

Postal address	Phone	Telefax	Number of app.
Box 140, S-851 03 Sundsvall	+46 60 12 38 50	+46 60 15 07 10	

Not to be reprinted without permission